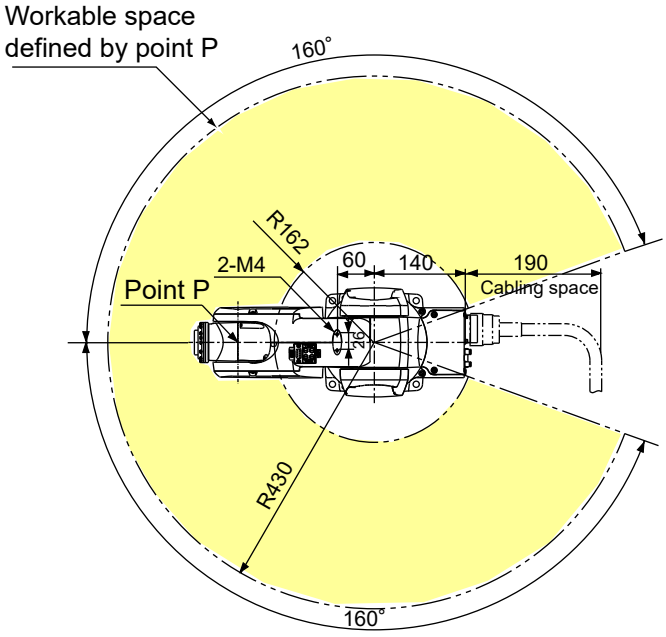
Workable space
defined by point P
160°
R162
2-M4
Point P
60
140
190
Cabling space
R430
160°

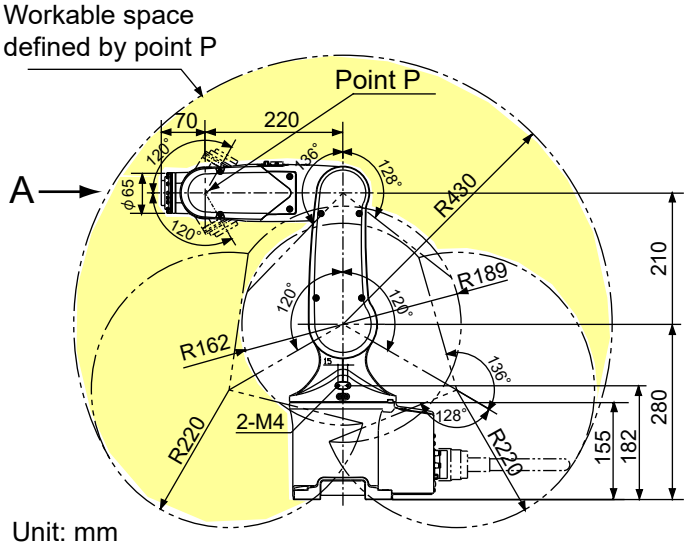
Workable space
defined by point P
Point P
70
220
A
φ65
120°
136°
128°
R430
R189
R162
R220
2-M4
210
280
155
182
Unit: mm

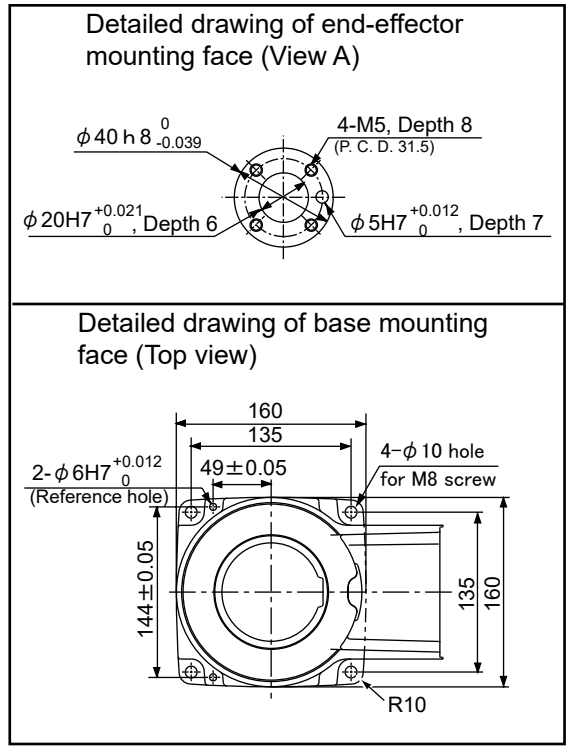
Detailed drawing of end-effector
mounting face (View A)
φ40 h 8 0 -0.039
4-M5, Depth 8
(P. C. D. 31.5)
φ20H7 +0.021 0 , Depth 6
φ5H7 +0.012 0 , Depth 7
Detailed drawing of base mounting
face (Top view)
160
135
49±0.05
2-φ6H7 +0.012 0
(Reference hole)
4−φ10 hole
for M8 screw
144±0.05
135
160
R10