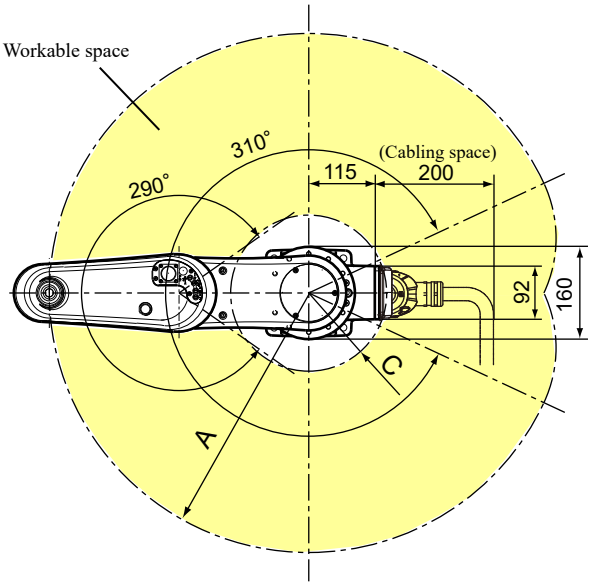


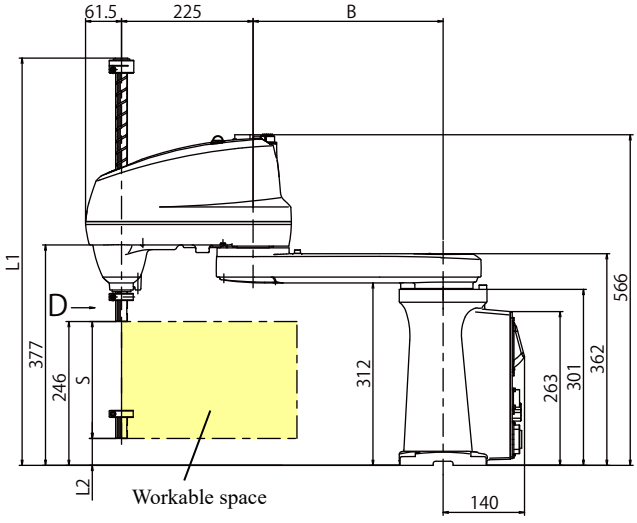


Detailed drawing of hand mounting face (Viewed from D)

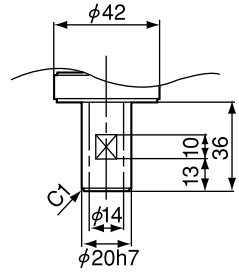


Flange (option) mounting face

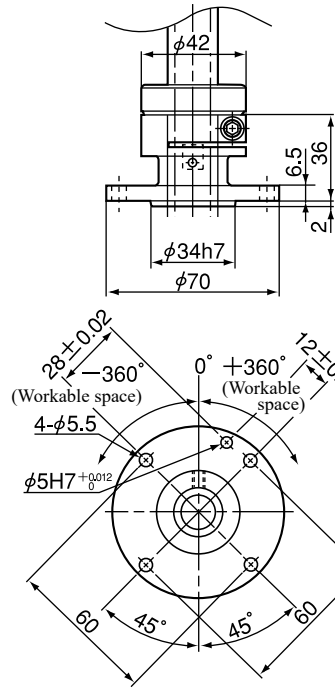


| Model | A | B | C |
|---|---|---|---|
| HS035A1-N*-NNU | 350 | 125 | 143 |
| HS045A1-N*-NNU | 450 | 225 | 136 |
| HS055A1-N*-NNU | 550 | 325 | 191 |

Unit: mm

Base mounting dimensions

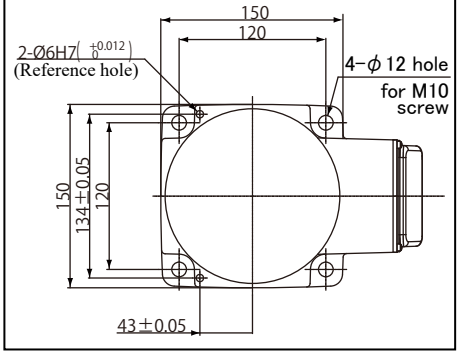


Dimensions that differ according to Z-axis stroke (S)

| Z-axis stroke: S (mm) | L1 | L2 |
|---|---|---|
| *=10 : 100 | 597 | 146 |
| *=15 : 150 | 647 | 96 |
| *=20 : 200 | 697 | 46 |
| *=32 : 320 | 817 | -74 (Note) |

(Note)
If Z-axis stroke is 320 mm, the Z axis in the lowermost position may reach below the base mounting face.