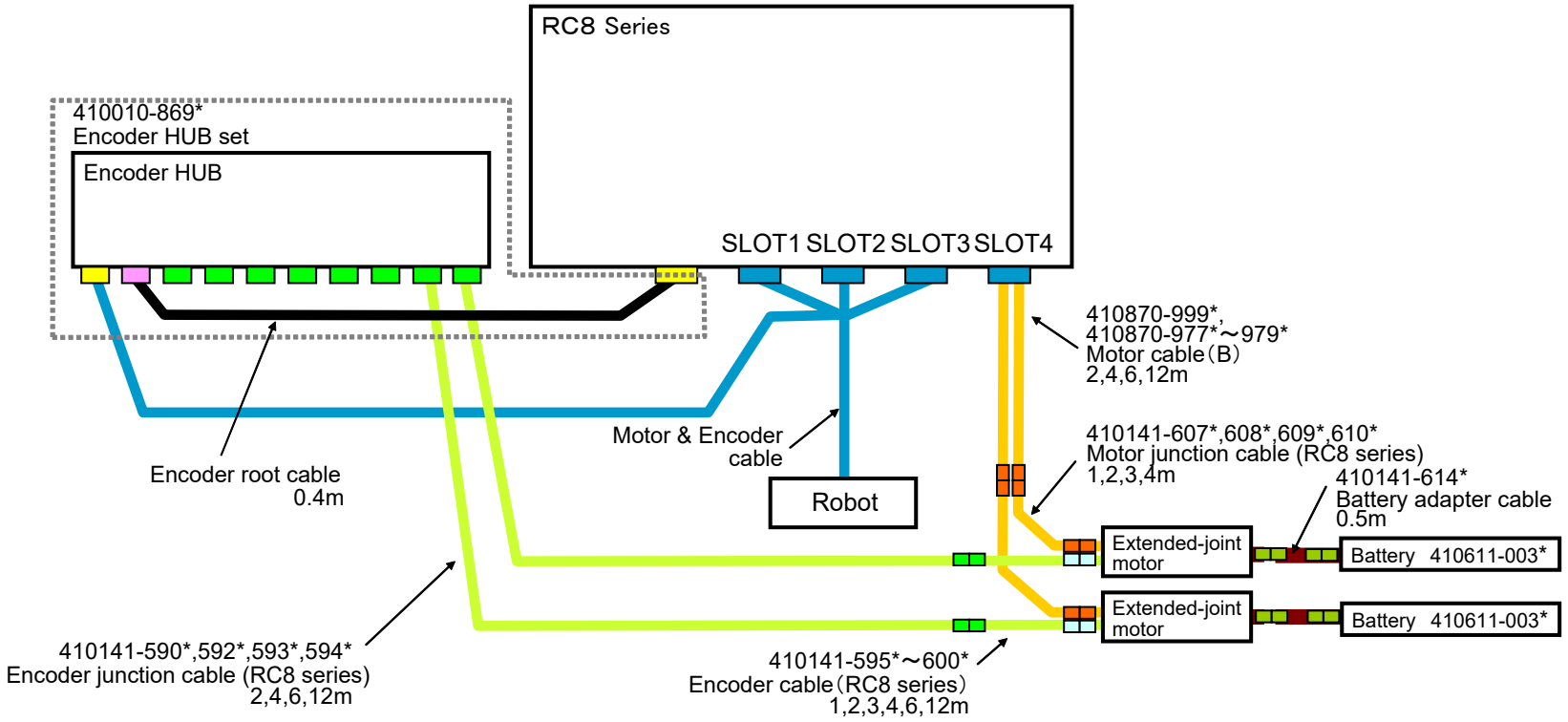■Configuration example : 6-axis robot + Extended-joint support