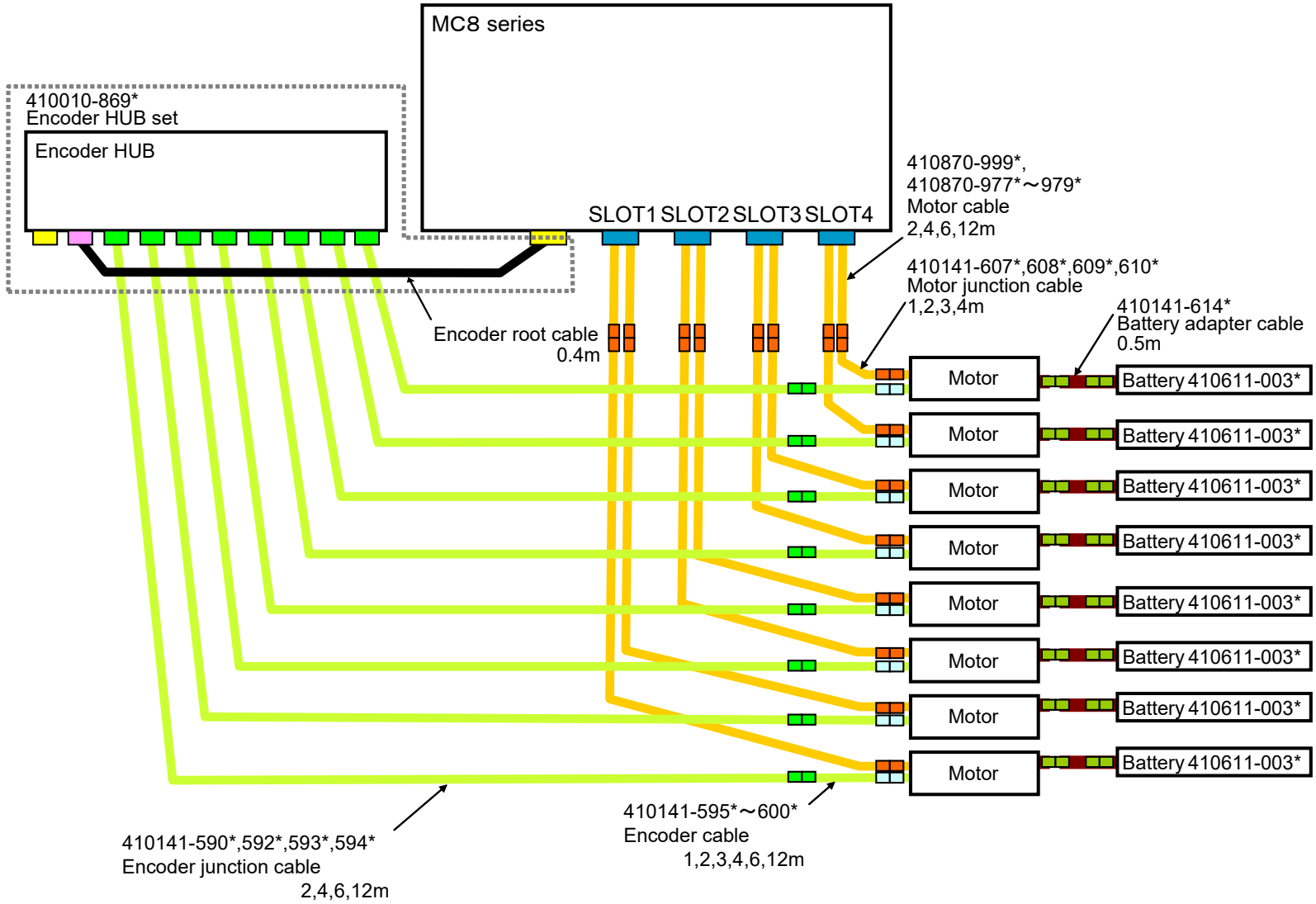
MC8 series
410010-869*
Encoder HUB set
Encoder HUB
SLOT1 SLOT2 SLOT3 SLOT4
410870-999*,
410870-977*～979*
Motor cable
2,4,6,12m
410141-607*,608*,609*,610*
Motor junction cable
1,2,3,4m
410141-614*
Battery adapter cable
0.5m
Encoder root cable
0.4m
Motor
Battery 410611-003*
410141-590*,592*,593*,594*
Encoder junction cable
2,4,6,12m
410141-595*～600*
Encoder cable
1,2,3,4,6,12m