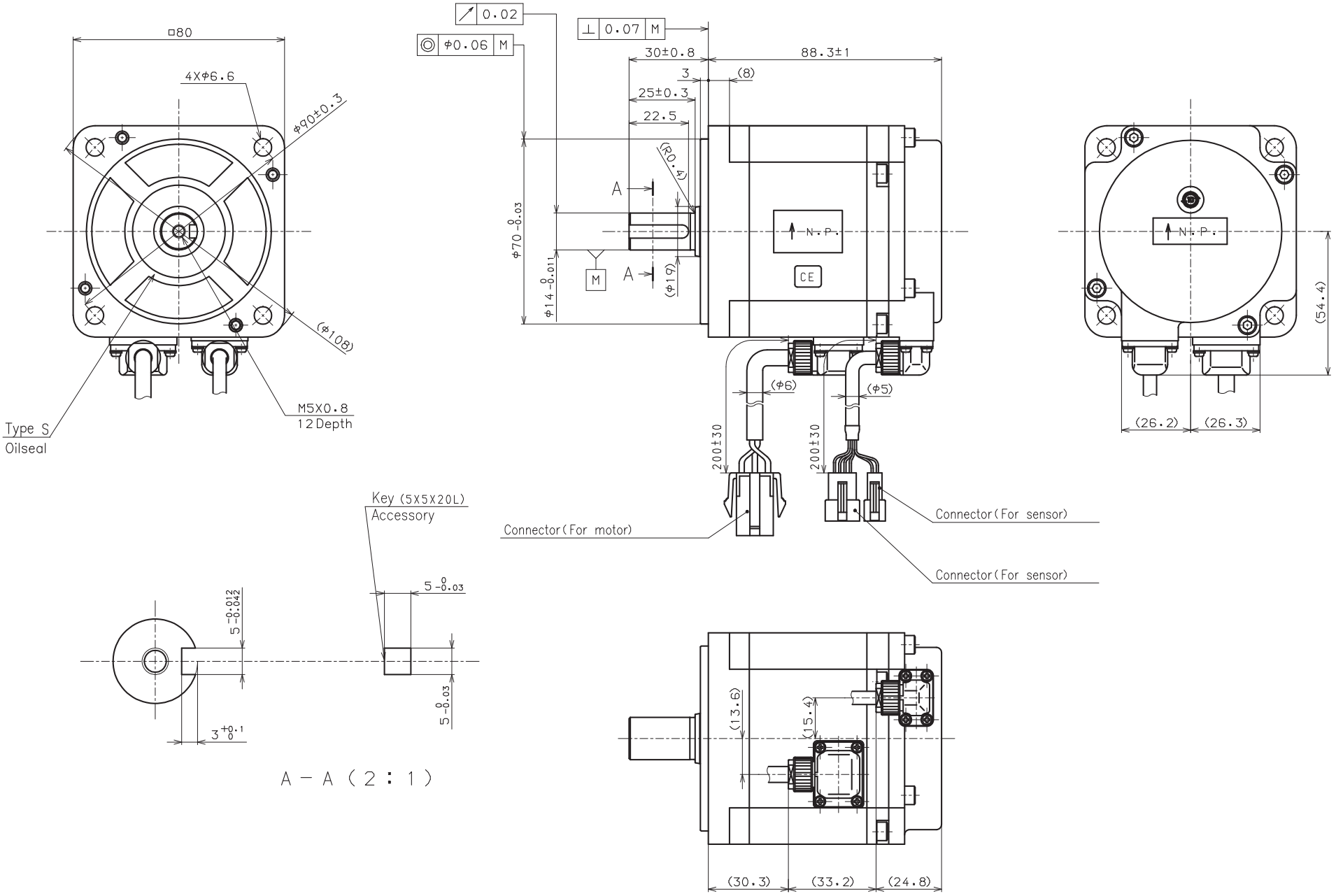Model	R2AA08040FXPWK*
Part No.	410627-149*