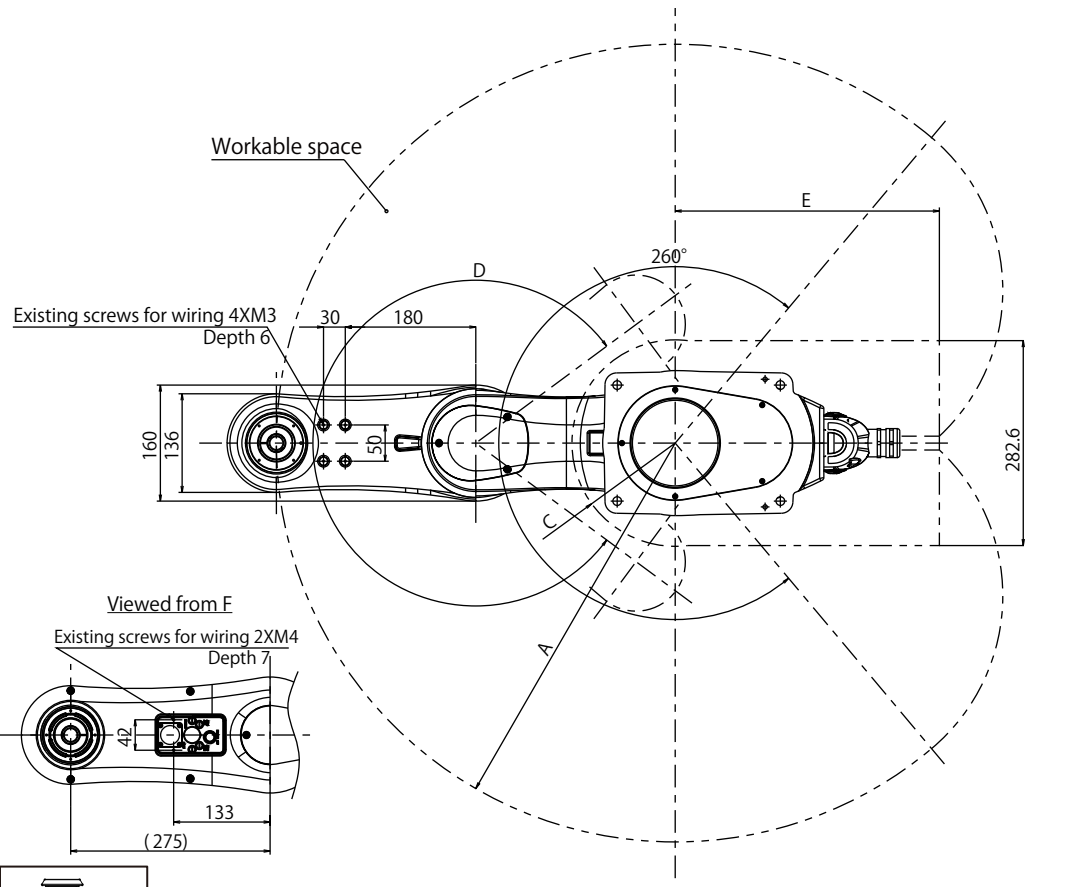

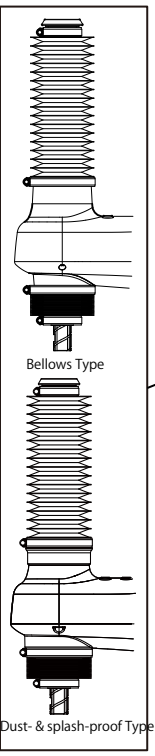

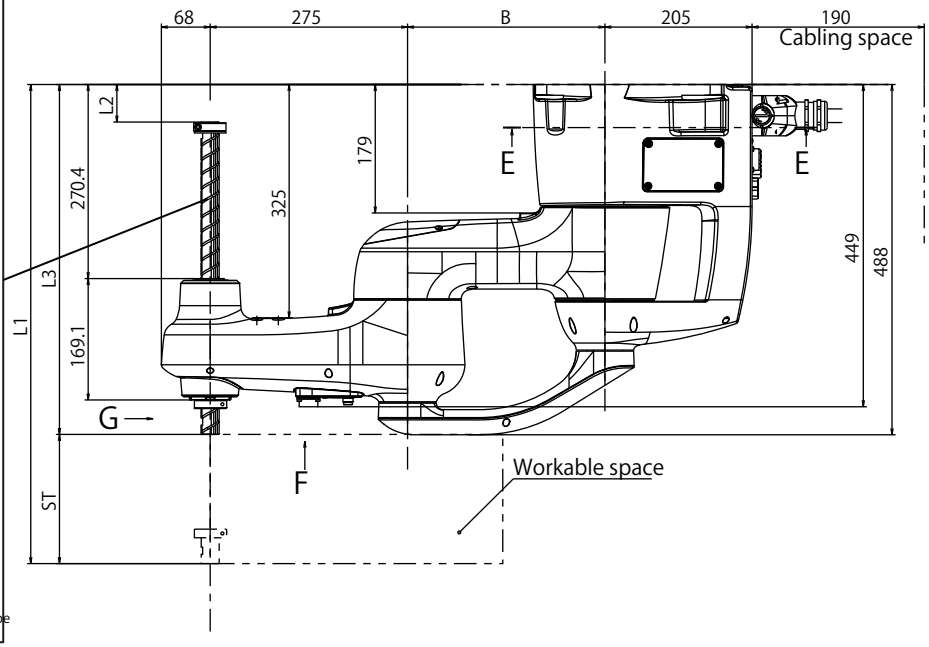

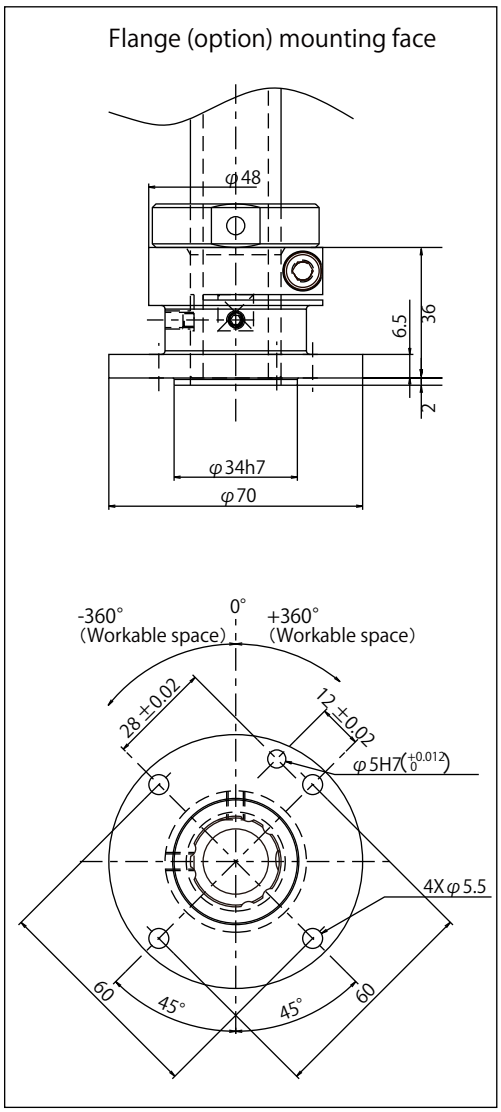

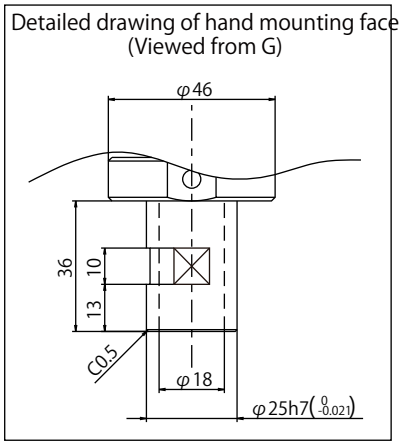

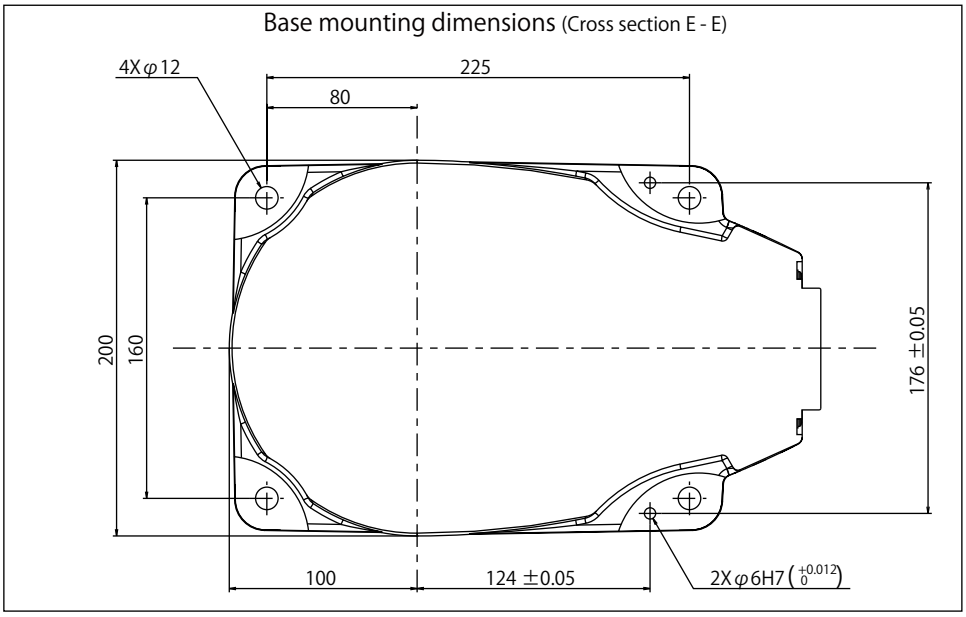

Model	A	B	C	D	E
HSSR048A1-S*	480	205	164.4 (*1)	287°	406.53
HSSR055A1-S*	550	275	142.4 (*1)	300°	364.32
HSSR065A1-S*	650	375	194.0	300°	287.62

Note1) Some changes to the model.
See below for the operating range after the change.

Type	ST(mm)	L1	L2	L3	UL-Listed models
Standard	*=10:100	587.5	152.3	487.5	UL-Listed models
	*=20:200	687.5	52.3		
	*=32:320	807.5	-67.7 (*2)		
	*=51:510	997.5	-257.7 (*2)		not prepared
Bellows Dust- & splash-proof H1 grease	*=17:170	687.5	45.4	517.5	UL-Listed models
	*=29:290	807.5	-74.6 (*2)		
	*=45:450	982.5	-249.6 (*2)	532.5	not prepared

Note2) If the length of the Z-axis is 290, 320,450,510 mm, the top end of the Z-axis motion range reaches the higher position than the robot mount surface. Make sure that the Z-axis does not contact with other objects.

Unit : mm