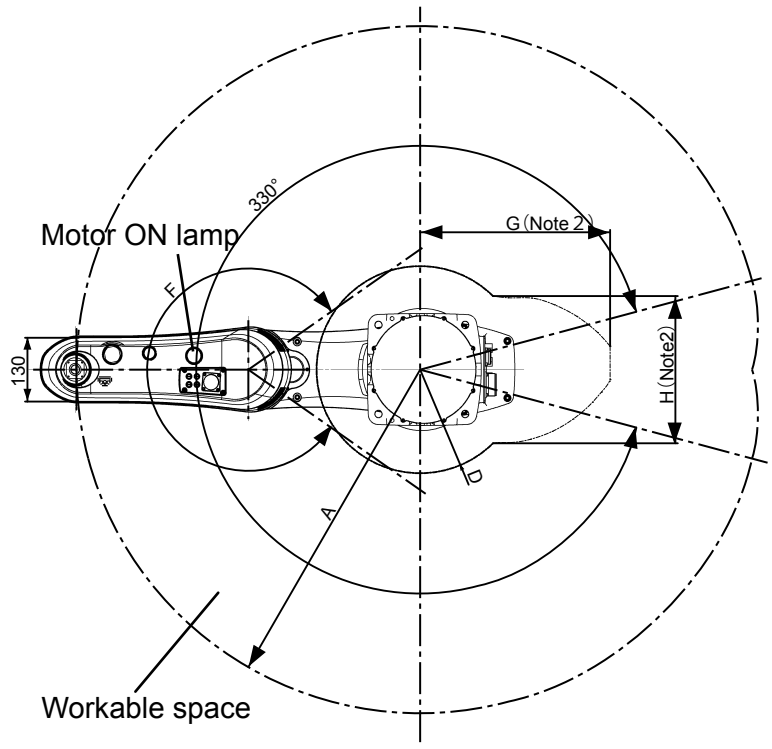

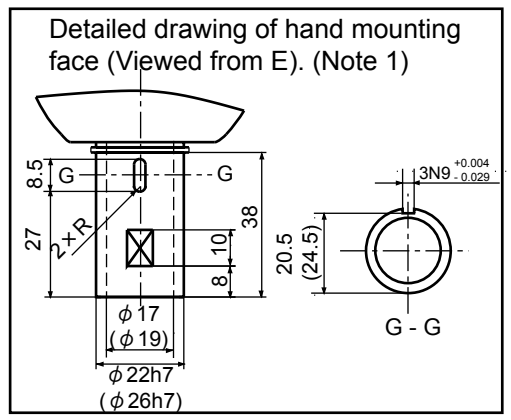

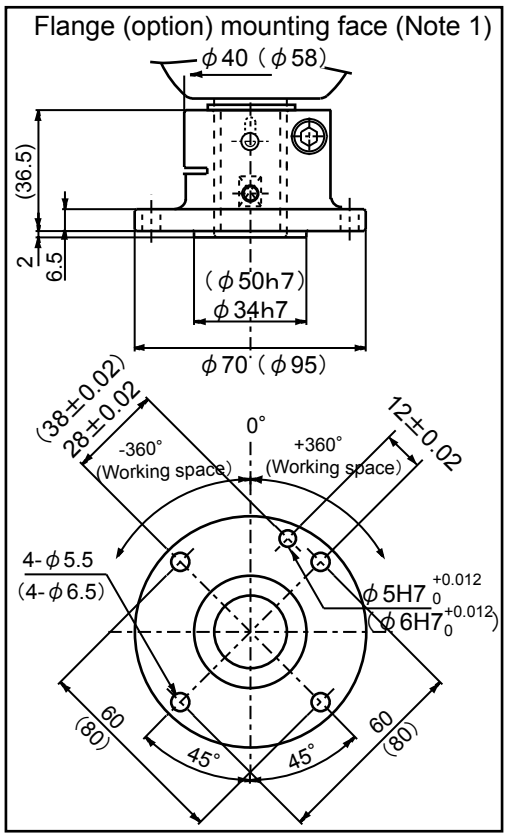

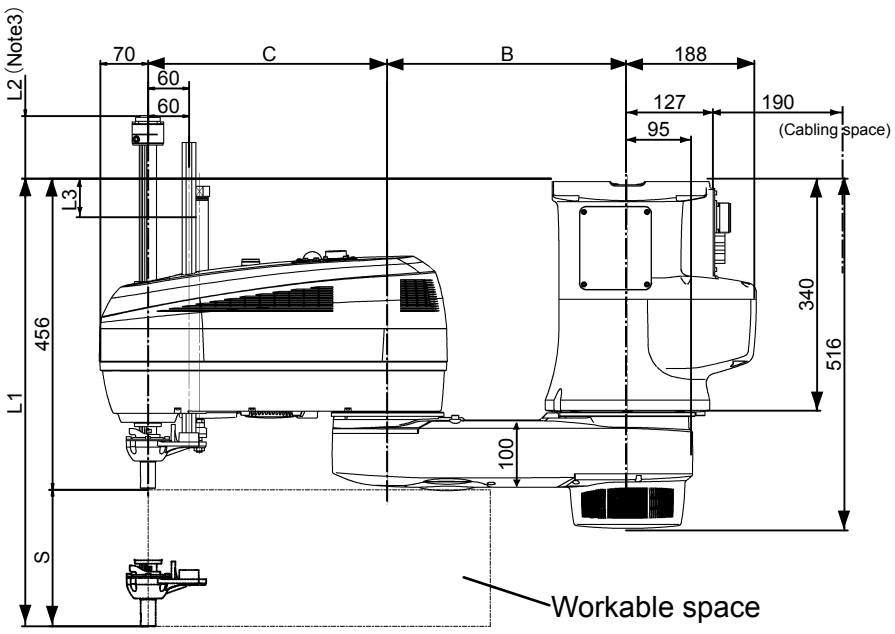

Unit: mm

Type	A	B	C	D	F	G	H
HMS-4070*-UL, HMS-4A70*-UL	700	350	350	211	290°	387	300
HMS-4085*-UL, HMS-4A85*-UL	850	350	500	311	284°	397	178

S (Z axis stroke)	L1	L2	L3	
			10kg	20kg
200	-656	-456	49	43
300	-756	-456	149	143
400	-856	-456	249	243

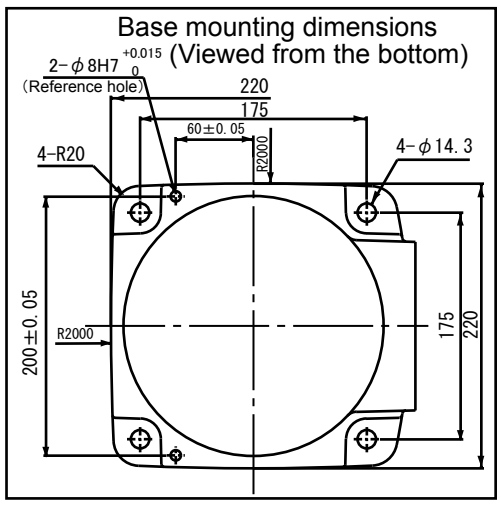

Note 1: Values denote dimensions for the 10kg payload type (HMS-40***-UL), and values enclosed in ( ) denote dimensions for the 20kg payload type (HMS-4A***-UL).

Note 2: The workable space is limited so that the unit does not interfere with the cables.

Note 3: In the case of the overhead-mount type, the Z axis in the uppermost position may reach higher than the base mounting face. Be careful with the interference with surrounding facilities.