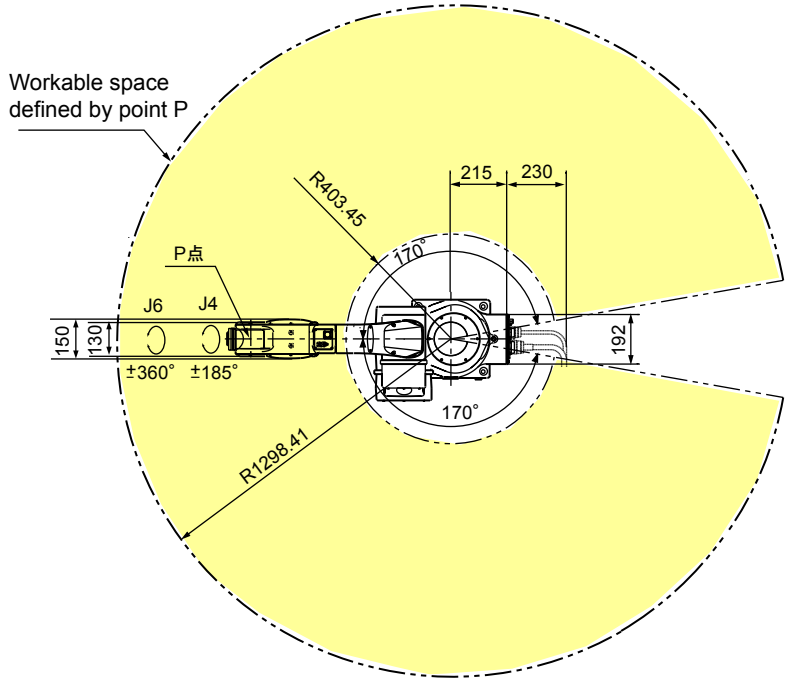

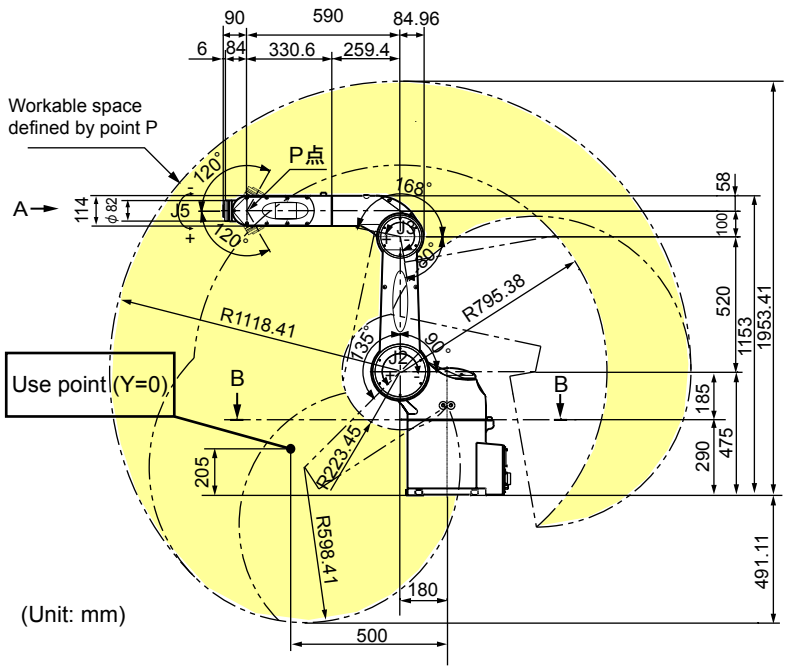

Detailed drawing of end-effector mounting face (View: A)

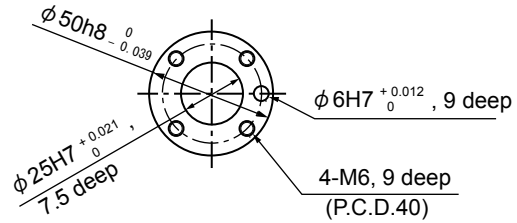
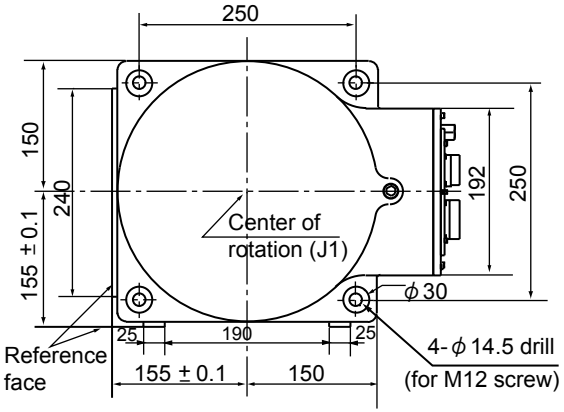
Detailed drawing of base mounting face (View: B-B)