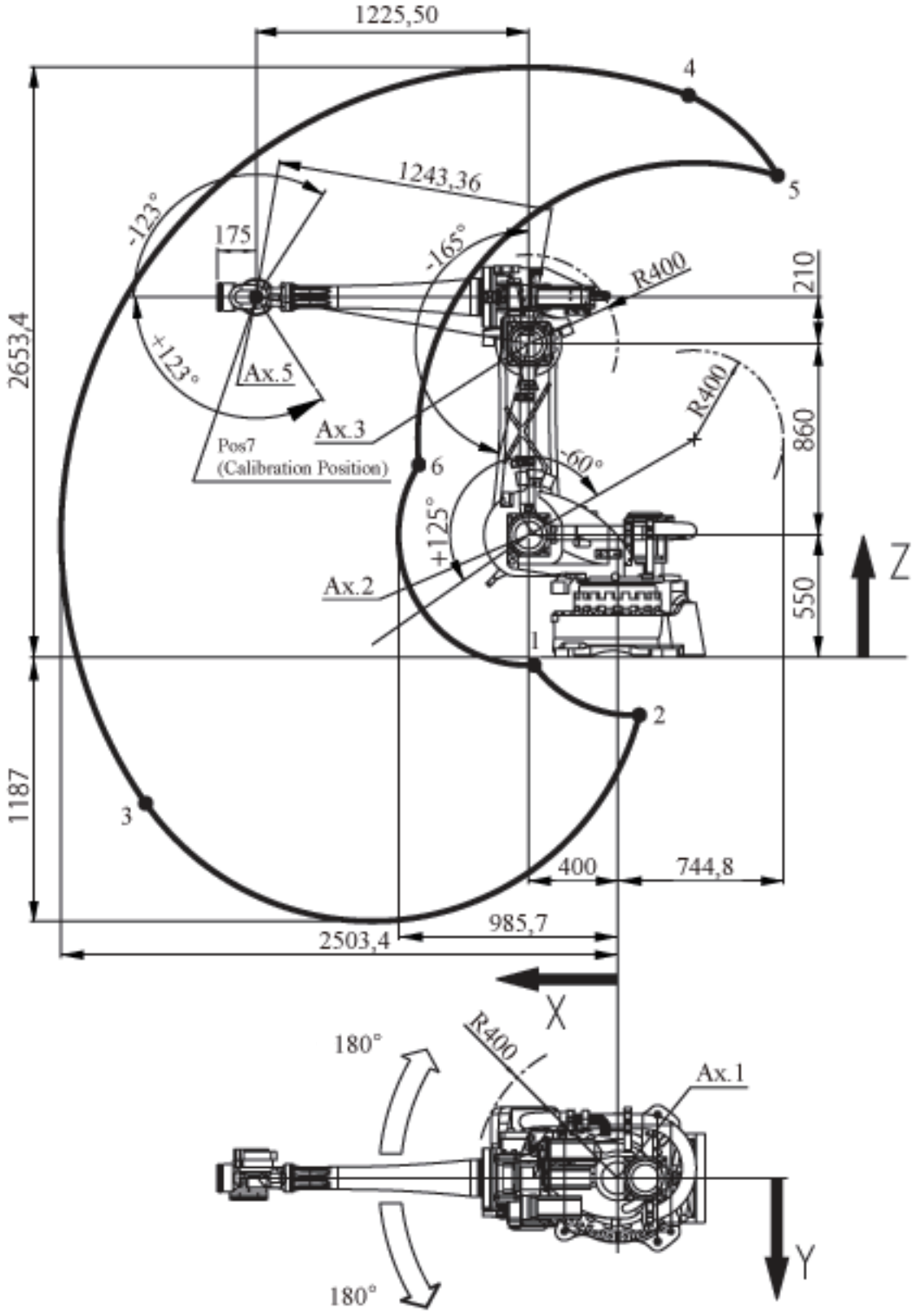
1225,50
4
5
1243,36
-123°
175
-165°
R400
210
2653,4
+123°
Ax.5
Ax.3
R400
860
Pos7
(Calibration Position)
6
-60°
+125°
Ax.2
550
Z
1
2
1187
3
400
744,8
985,7
2503,4
X
180°
R400
Ax.1
Y
180°

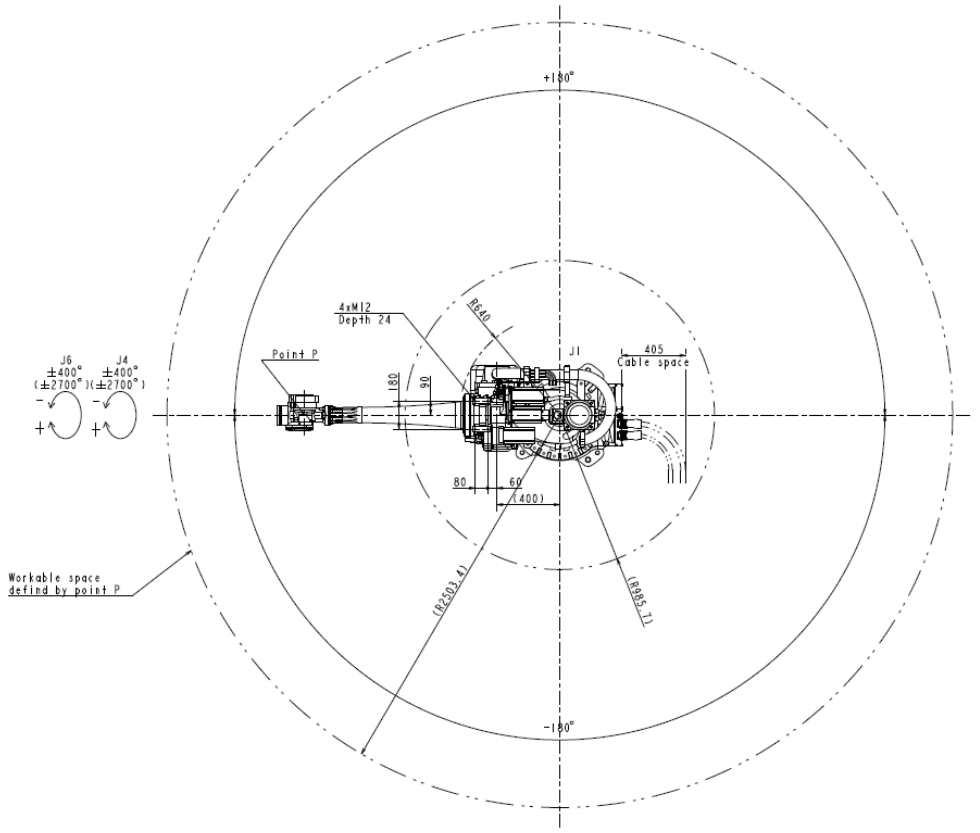
+180°
4xM12
Depth 24
R640
J6
±400°
(±2700°)
J4
±400°
(±2700°)
Point P
180
90
J1
405
Cable space
80
60
(400)
Workable space
defind by point P
(R2503,4)
(R885,7)
-180°

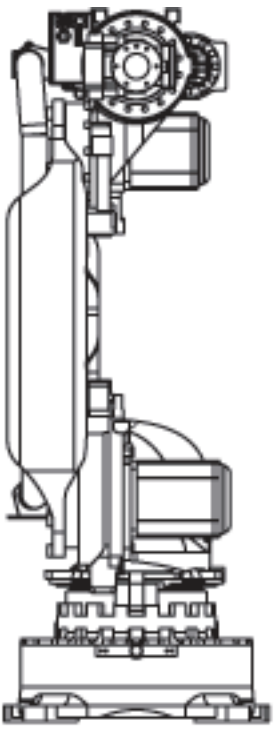

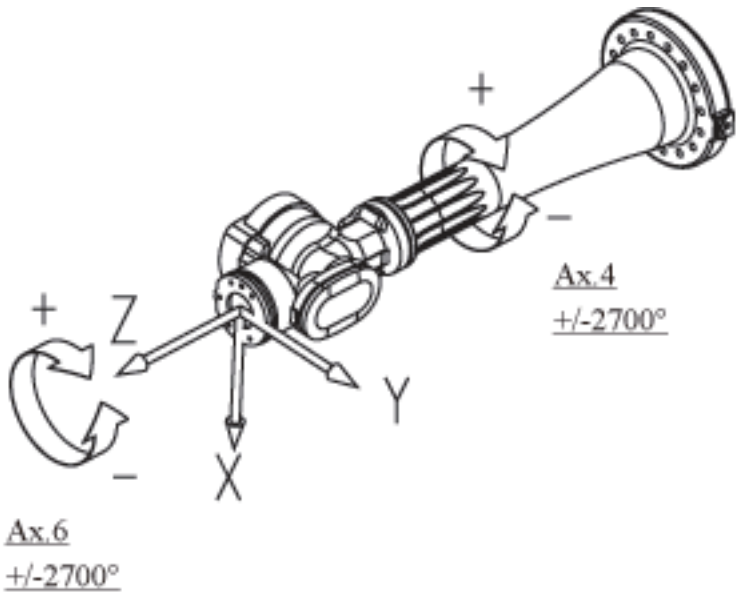
+
-
Ax.4
+/-2700°
+
Z
Y
-
X
Ax.6
+/-2700°