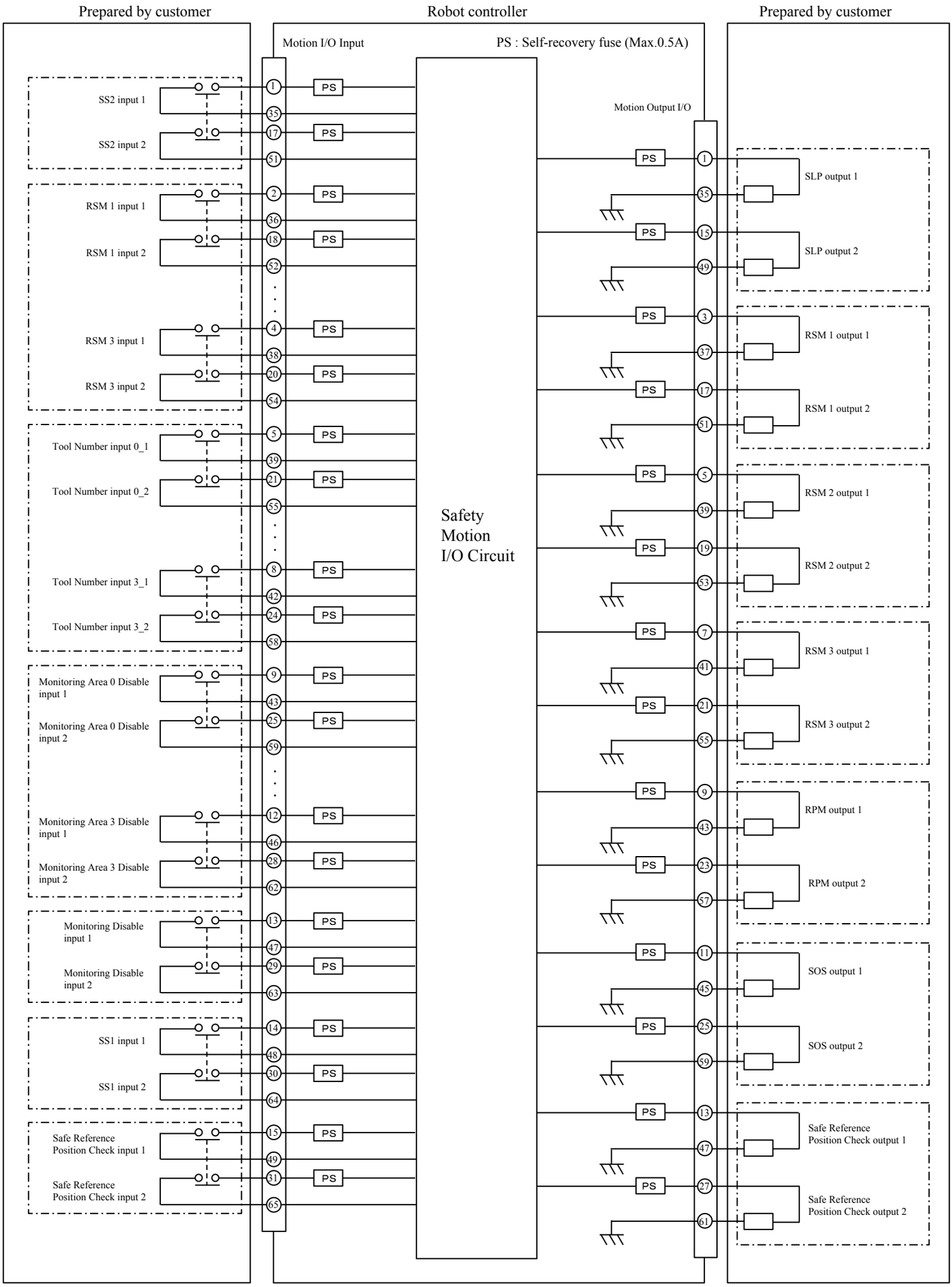
Prepared by customer
Robot controller
Prepared by customer
Motion I/O Input
PS : Self-recovery fuse (Max.0.5A)
Motion Output I/O
SS2 input 1
SS2 input 2
RSM 1 input 1
RSM 1 input 2
RSM 3 input 1
RSM 3 input 2
Tool Number input 0_1
Tool Number input 0_2
Tool Number input 3_1
Tool Number input 3_2
Monitoring Area 0 Disable input 1
Monitoring Area 0 Disable input 2
Monitoring Area 3 Disable input 1
Monitoring Area 3 Disable input 2
Monitoring Disable input 1
Monitoring Disable input 2
SS1 input 1
SS1 input 2
Safe Reference Position Check input 1
Safe Reference Position Check input 2
PS
Safety Motion I/O Circuit
SLP output 1
SLP output 2
RSM 1 output 1
RSM 1 output 2
RSM 2 output 1
RSM 2 output 2
RSM 3 output 1
RSM 3 output 2
RPM output 1
RPM output 2
SOS output 1
SOS output 2
Safe Reference Position Check output 1
Safe Reference Position Check output 2