LZZN

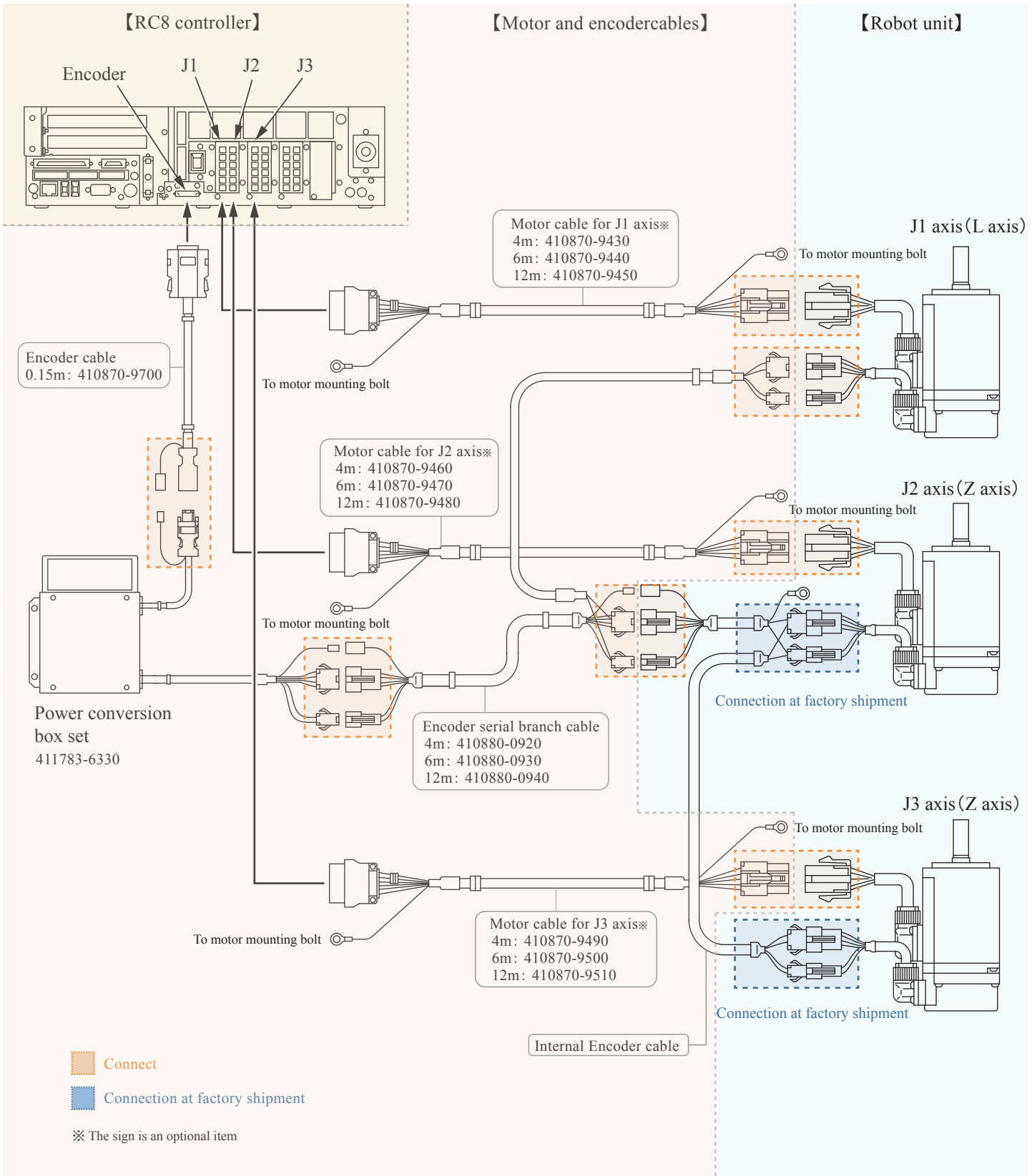
【RC8 controller】
【Motor and encodercables】
【Robot unit】
Encoder
J1
J2
J3
Motor cable for J1 axis※
4m: 410870-9430
6m: 410870-9440
12m: 410870-9450
J1 axis (L axis)
To motor mounting bolt
Encoder cable
0.15m: 410870-9700
To motor mounting bolt
Motor cable for J2 axis※
4m: 410870-9460
6m: 410870-9470
12m: 410870-9480
J2 axis (Z axis)
To motor mounting bolt
To motor mounting bolt
Power conversion
box set
411783-6330
Encoder serial branch cable
4m: 410880-0920
6m: 410880-0930
12m: 410880-0940
Connection at factory shipment
J3 axis (Z axis)
To motor mounting bolt
To motor mounting bolt
Motor cable for J3 axis※
4m: 410870-9490
6m: 410870-9500
12m: 410870-9510
Connection at factory shipment
Internal Encoder cable
Connect
Connection at factory shipment
※ The sign is an optional item