# LYZZ

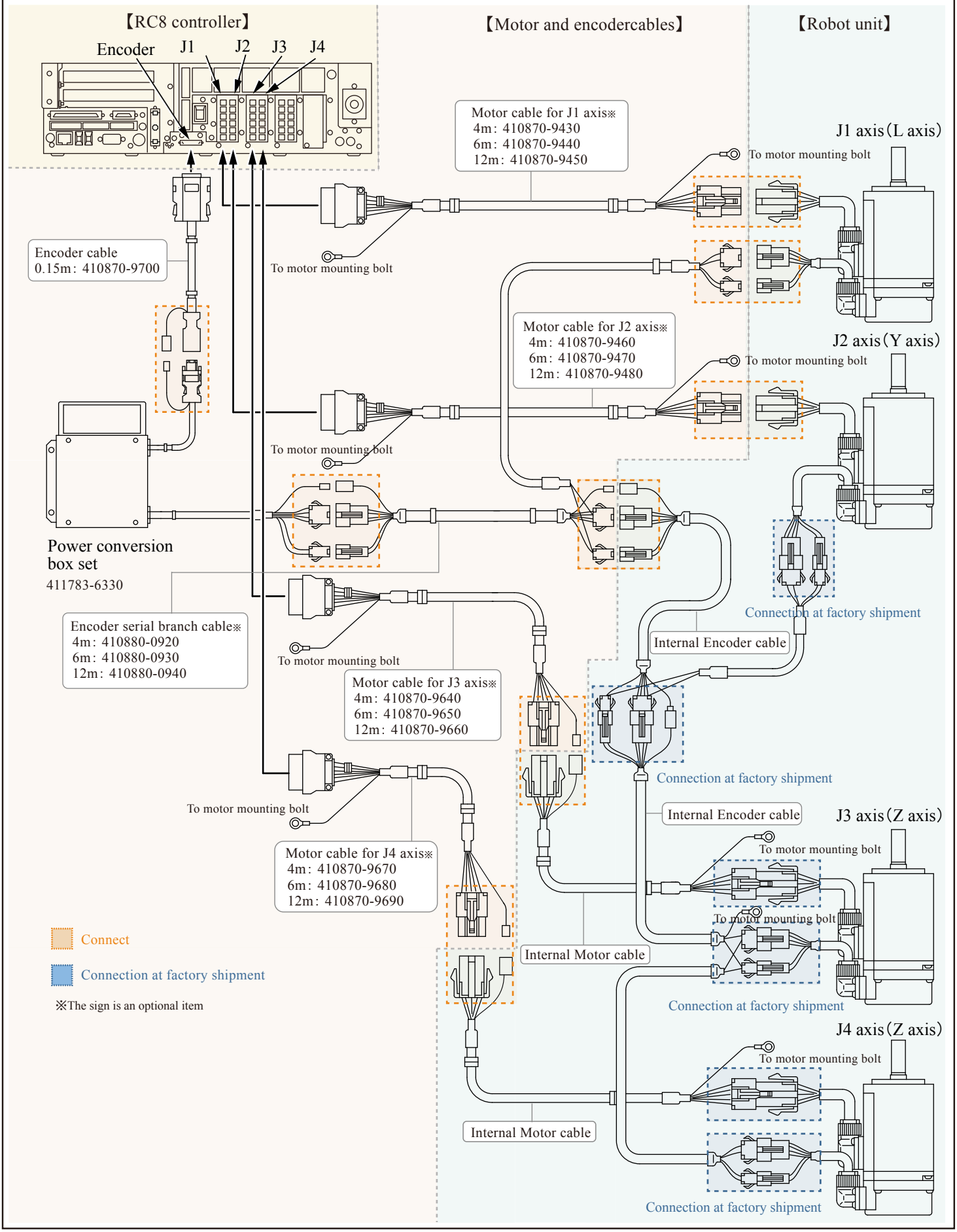
【RC8 controller】
【Motor and encodercables】
【Robot unit】
Encoder
J1
J2
J3
J4
Motor cable for J1 axis※
4m: 410870-9430
6m: 410870-9440
12m: 410870-9450
J1 axis (L axis)
To motor mounting bolt
Encoder cable
0.15m: 410870-9700
To motor mounting bolt
Motor cable for J2 axis※
4m: 410870-9460
6m: 410870-9470
12m: 410870-9480
J2 axis (Y axis)
To motor mounting bolt
To motor mounting bolt
Power conversion
box set
411783-6330
Connection at factory shipment
Encoder serial branch cable※
4m: 410880-0920
6m: 410880-0930
12m: 410880-0940
To motor mounting bolt
Internal Encoder cable
Motor cable for J3 axis※
4m: 410870-9640
6m: 410870-9650
12m: 410870-9660
Connection at factory shipment
To motor mounting bolt
Internal Encoder cable
J3 axis (Z axis)
To motor mounting bolt
Motor cable for J4 axis※
4m: 410870-9670
6m: 410870-9680
12m: 410870-9690
To motor mounting bolt
Connect
Connection at factory shipment
Internal Motor cable
Connection at factory shipment
※The sign is an optional item
J4 axis (Z axis)
To motor mounting bolt
Internal Motor cable
Connection at factory shipment