Workable space of the robot eith the half-range type stand

Arm lengh of R-axis: 200mm

X:450mm

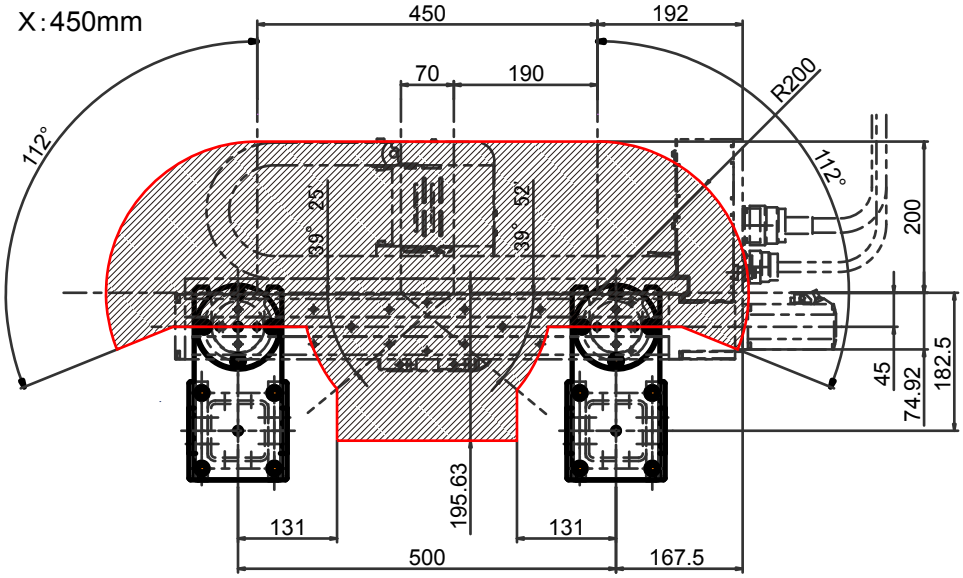

X:760mm

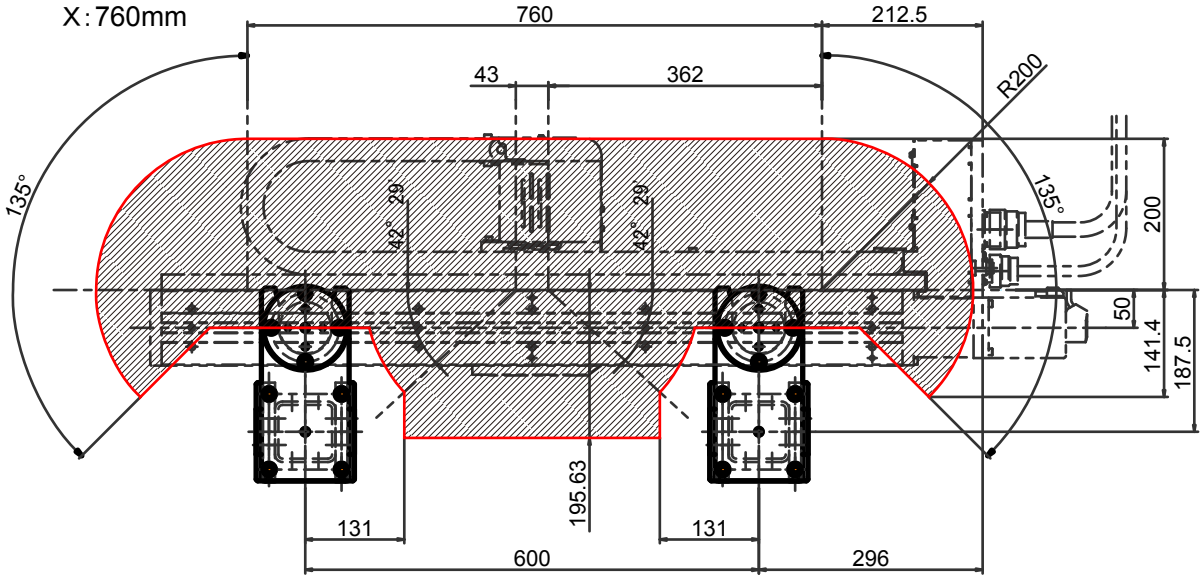
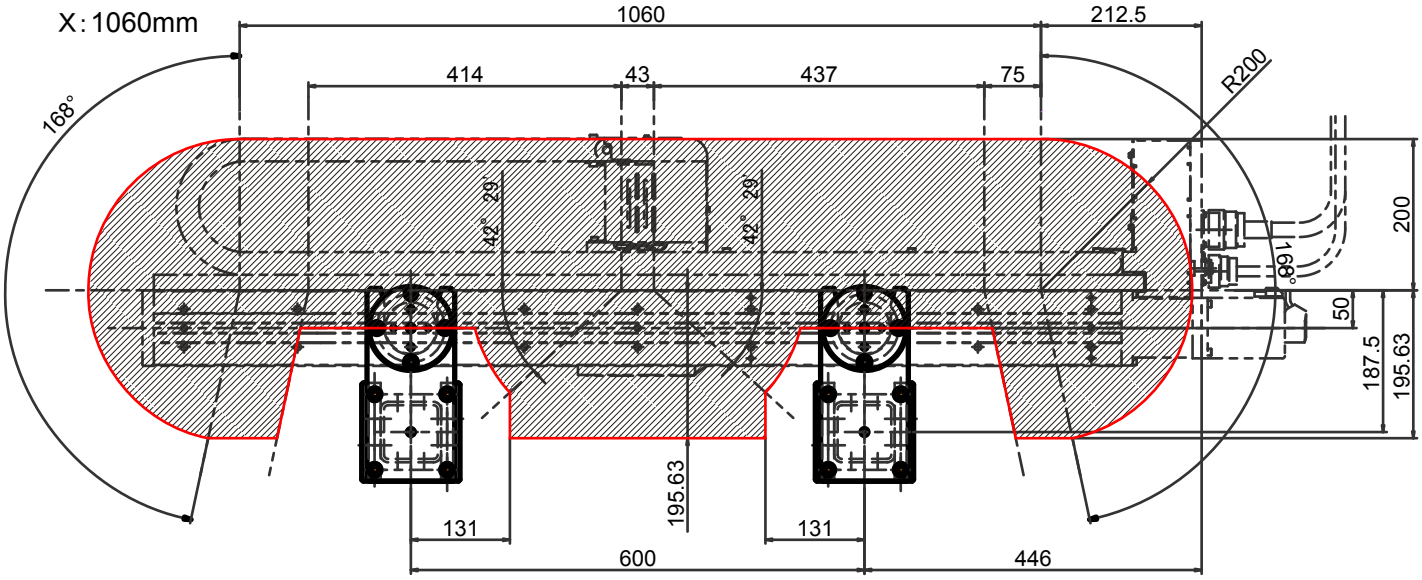
X:1060mm