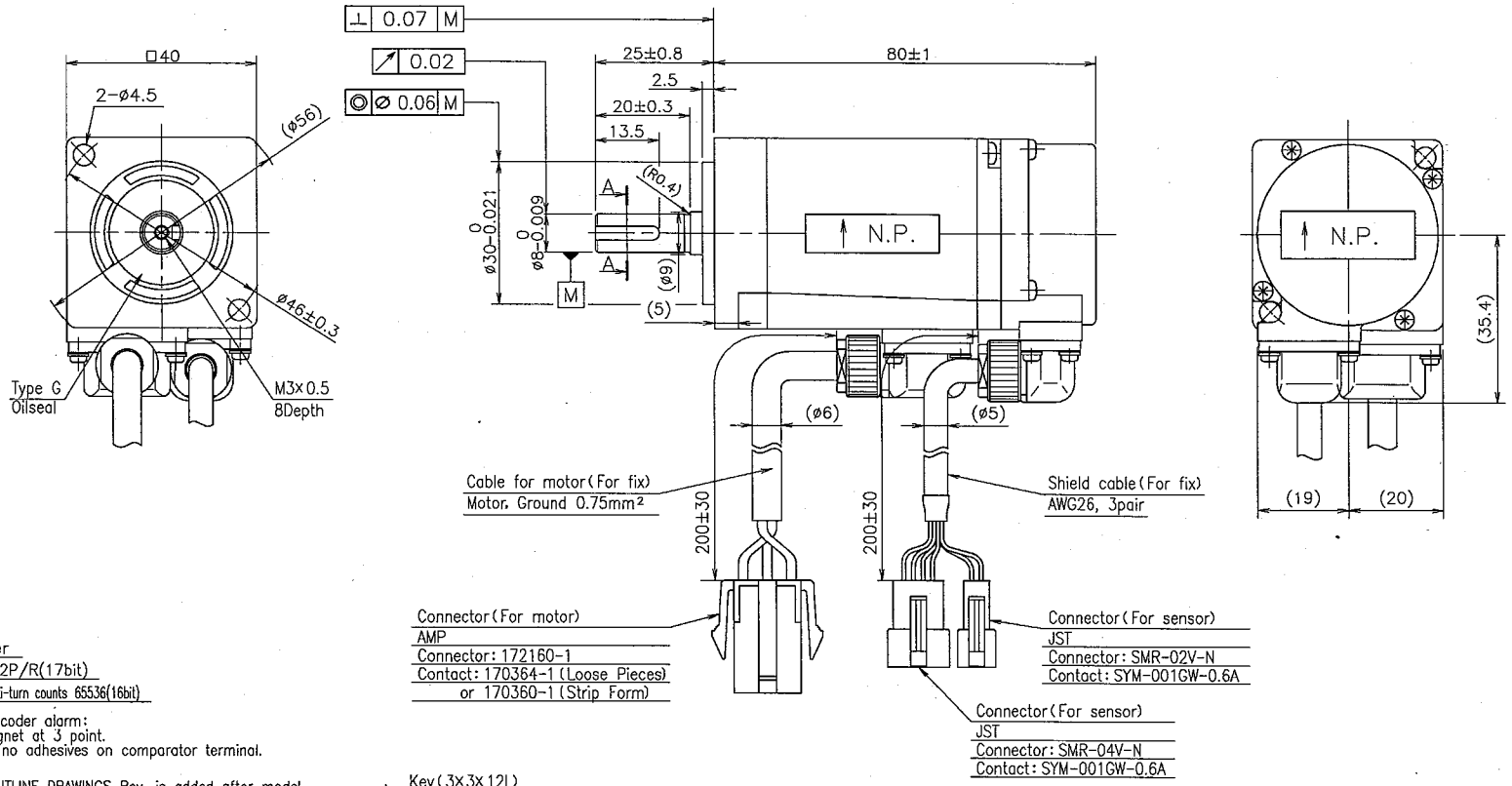

Sensor

Absolute Encoder
Resolution 131072P/R(17bit)
Amount of maximum multi-turn counts 65536(16bit)

Measures for PS encoder alarm:
- Bonded bias magnet at 3 point.
  There should be no adhesives on comparator terminal.

Identification:
- SERVO MOTOR OUTLINE DRAWINGS Rev. is added after model of an encoder memory.

Degrees of protection

IP67(except for the shaft hole and the edge of the cable)

Motor Mass

0.45kg

Accessory

Key (3x3x12L)

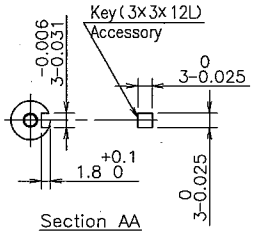

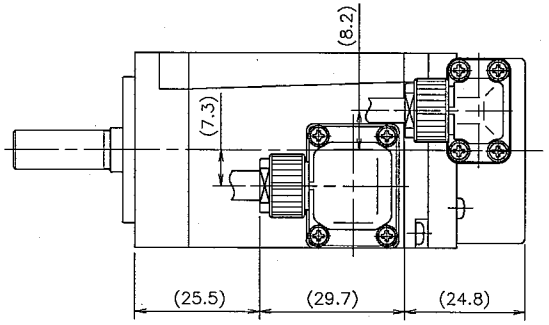

Connection

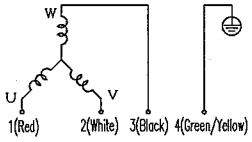

Direction of rotation is C.C.W for phase sequence UVW, as seen from front shaft.

Sensor

Connector: SMR-04V-N

Pin No.	Signal	Color	Pair
1	+5V	Red	
2	0V	Black	
3	ES+	Brown	
4	ES-	Blue	

Connector: SMR-02V-N

Pin No.	Signal	Color	Pair
1	EBAT+	Pink	
2	EBAT-	Purple	

R2AA04010FXPWK